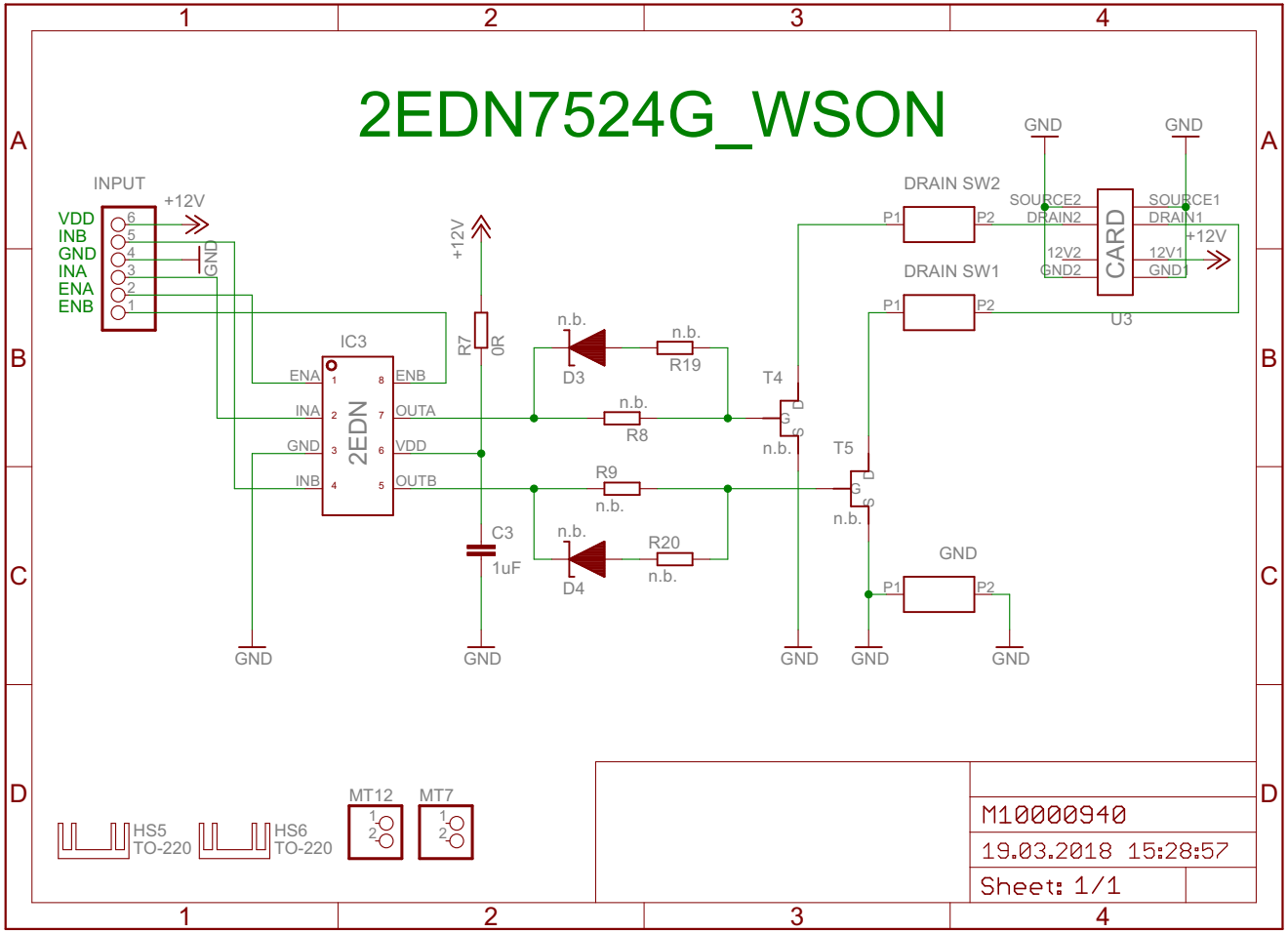
2EDN7524G_WSON
INPUT
VDD
INB
GND
INA
ENA
ENB
+12V
GND
IC3
2EDN
ENA
ENB
INA
OUTA
GND
VDD
INB
OUTB
R7
0R
C3
1uF
D3
D4
n.b.
R19
R8
R9
R20
T4
T5
DRAIN SW2
DRAIN SW1
P1
P2
U3
CARD
SOURCE2
DRAIN2
12V2
GND2
SOURCE1
DRAIN1
12V1
GND1
HS5
TO-220
HS6
TO-220
MT12
MT7
M10000940
19.03.2018 15:28:57
Sheet: 1/1